ResearchGate

See discussions, stats, and author profiles for this publication at: https://www.researchgate.net/publication/264212870

An Analytical Solution of the Inverse Kinematics Problem of Industrial Serial Manipulators with an Ortho-parallel Basis and a Spherical Wrist

Conference Paper · May 2014

CITATIONS
26

READS
11,670

3 authors:

Mathias Brandstötter
Carinthian University of Applied Sciences
66 PUBLICATIONS **450** CITATIONS

SEE PROFILE

Arthur Angerer
Private University for Health Sciences, Medical Informatics and Technology GmbH
5 PUBLICATIONS **52** CITATIONS

SEE PROFILE

Michael Hofbaur
Alpen-Adria-Universität Klagenfurt
88 PUBLICATIONS **1,073** CITATIONS

SEE PROFILE

All content following this page was uploaded by Mathias Brandstötter on 25 July 2014.

The user has requested enhancement of the downloaded file.

An Analytical Solution of the Inverse Kinematics Problem of Industrial Serial Manipulators with an Ortho-parallel Basis and a Spherical Wrist

Mathias Brandstötter[1], Arthur Angerer[1], and Michael Hofbaur[1]

***Abstract*— An efficient and generic method to compute the inverse kinematics of common serial manipulator arms up to 6 DoF is shown in this work. The main focus lies on using only essential design dimensions provided in most manufacturing data sheets instead of tediously deriving the Denavit-Hartenberg parameter set. The simplest description of manipulators with an ortho-parallel basis with offsets and a spherical wrist can be accomplished by 7 geometrical parameters. We show how to compute all possible joint angles analytically from a given end-effector pose. A fast and general algorithm has been established based on this slim parameter set.**

I. INTRODUCTION

Serial 6R manipulators have at most 16 solutions to the inverse kinematics problem to ensure a desired position and orientation of the end-effector. If the last three axes intersect in a point, the manipulator is characterized as decoupled and thereby the maximum number of solutions is reduced to 8. To position this point (denoted by C in Fig. 1) of a decoupled manipulator in space there are up to 4 different postures of the first three axes. For each positioning solution there exist two possible solutions for the last three axes for a specified end-effector orientation. [1]

In this work we confine ourselves to industrial robots with 3R ortho-parallel basis structure and spherical wrists. This type of robot structure is by far the most common one for industrial serial manipulators. A scheme of the 6R manipulator with an ortho-parallel substructure is shown in Fig. 1. By definition of ortho-parallel 3R manipulators (see Fig. 2) and [2], axes g_1 and g_2 are orthogonal to each other when a_1 is set to zero and axis g_2 is parallel to axis g_3. The joint with axis g_2 is the so-called shoulder and the joint with axis g_3 is referred to as elbow. Robots with a spherical wrist are decoupled manipulators due to the property that their last three axes intersect in point C. A spherical wrist is shown in Fig. 5 and the wrist axes are denoted by g_4, g_5 and g_6.

Pieper [3] showed that the position and the orientation problem of the end-effector of this type of articulated robots (decoupled manipulators) can be independently solved. Thus the inverse kinematics calculation can be split up into a position and an orientation problem which simplifies the calculation [1].

The conventional method to describe the structure of a serial manipulator was introduced by Denavit and Hartenberg [4]. Hence, most of the calculation methods for the inverse kinematics are based on the notation of the Denavit-Hartenberg parameters (DH-parameters) and thus on matrix multiplications (see e.g., [5], [6], [7]). Küçük and Bingül [8] derived the closed solution of sixteen types of industrial manipulators in a geometrical form, however, they do not include offsets in the robot structures. Craig solved the inverse kinematics of the Puma 560 algebraically and the Motoman L-3 partially algebraic and partially geometric [9].

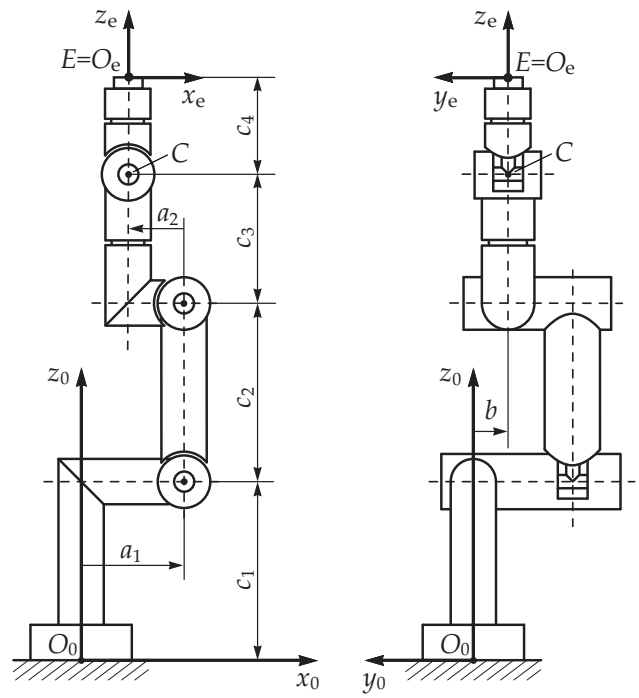

(a) Side view (b) Back view

Fig. 1. The two typical views in data sheets of serial robot manipulators and our defined home position in this work with the 7 essential geometrical parameters. The coordinate system for the basis and the end-effector are predefined.

However, using DH-parameters for inverse kinematics calculation in practice can be inconvenient. The DH-parameter notation is not unique and different DH-parameters can be found for the same robot structure which makes it difficult to compare robots to each other. The coordinate frame orientation of the base and the end-effector and the joint angle offsets are also not known in many cases and the relation of the robot structure and the corresponding DH-parameters has to be derived tediously.

In the following sections we describe how the inverse

[1]Mathias Brandstötter, Arthur Angerer, and Michael Hofbaur are with the Department of Biomedical Computer Science & Mechatronics, Institute of Automation and Control Engineering, UMIT, 6060 Hall in Tirol, Austria. {mathias.brandstoetter & arthur.angerer & michael.hofbaur}@umit.at

TABLE I

OPW-PARAMETER COLLECTION

[mm]	KUKA youBot Arm [10]	Katana 450 6M180 [11]	Schunk Powerball [12]	Stäubli TX40 [13]	Unimation Puma 560 [5]	Epson C3 [14]	ABB IRB 2400/10 [15]	Fanuc R2000iB/200R [16]	KUKA KR 6 R700 sixx [17]	Adept Viper s650 [18]
a_1	33	0	0	0	0	100	100	720	25	75
a_2	0	0	0	0	-20.32	0	-135	-225	-35	-90
b	0	0	0	35	149.09	0	0	0	0	0
c_1	147	201.5	205	320	660.4	320	615	600	400	335
c_2	155	190	350	225	431.8	250	705	1075	315	270
c_3	135	139	305	225	433.07	250	755	1280	365	295
c_4	217.5	188.3	75	65	56.25	65	85	235	80	80

kinematics can be calculated using only seven robot design parameters that are provided in most manufacturer's data sheets. With this set any ortho-parallel manipulator with spherical wrist can be described. Almost all industrially available serial 6 DoF manipulators show such a kinematic structure.

II. ORTHO-PARALLEL MANIPULATORS WITH SPHERICAL WRIST

A. Notation of Parameters

The schemes in Fig. 1 show a spacial 6 DoF manipulator with the notation of the link and joint parameters in the base coordinate system (O_0, x_0, y_0, z_0). The end-effector coordinate system can be noted by (O_e, x_e, y_e, z_e). We call the main arm lengths c_1, c_2, c_3, and c_4 and the arm-offsets a_1 and a_2. The lateral offset of the third arm in y_0-direction is denoted by b, see Fig. 1(b). The six joint angles are defined as $\theta_1, \ldots, \theta_6$. The home position of the manipulator is given by the position of the end-effector E as $e_{x_0} = a_1 + a_2$, $e_{y_0} = b$, $e_{z_0} = c_1 + c_2 + c_3 + c_4$, as can be seen in Fig. 1. The joint angels are defined as zero in this configuration ($\theta_i = 0$ for $i = 1 \ldots 6$).

B. Examples of Popular Industrial Type Robots

In Tab. I the parameters for ten commonly used industrial manipulators are listed. Only seven parameters are needed to describe the geometry of ortho-parallel manipulators with spherical wrist (OPW-parameters). The Kuka youBot Arm and the Katana 450 6M180 are 5 DoF manipulators lacking joint axis g_4 which results in orientation limitations in the workspace. The remaining manipulators provide a 6 DoF structure. All of them geometrically differ only in link lengths $c_1, \ldots, c_4$, shoulder offsets a_1, elbow offsets a_2 or lateral offsets b. The sign of a parameter corresponds to the direction of the respective coordinate axis, e.g., a_1 is positive and a_2 is negative in Fig. 1(a).

III. KINEMATICS

The kinematics problem can be solved by numerical or analytic methods. Here we show a geometry based technique which covers the most popular industrial robot arms. The arrangement of the links and joints is also named as 321 kinematic structure with offsets [3]. The special design allows to separate the problem into a *3R ortho-parallel* and a *3R wrist* subproblem.

The desired pose of the end-effector in the coordinate system (O_0, x_0, y_0, z_0) can be specified by a 3×1 position vector $\mathbf{u}_0 = [u_{x_0}, u_{y_0}, u_{z_0}]^T$ and a 3×3 rotation matrix $\mathbf{R}_e^0$:

$$\mathbf{R}_e^0 = \begin{bmatrix} e_{1,1} & e_{1,2} & e_{1,3} \\ e_{2,1} & e_{2,2} & e_{2,3} \\ e_{3,1} & e_{3,2} & e_{3,3} \end{bmatrix} \tag{1}$$

A. COORDINATES OF POINT C

For the calculation of the inverse kinematics of the 3R ortho-parallel substructure the position of point C in the base coordinate system has to be known. The coordinates of point C are obtained by moving from the desired end-effector position $\mathbf{u}_0$ into the negative z_e-direction of the end-effector coordinate system (O_e, x_e, y_e, z_e) for the length c_4:

$$\begin{bmatrix} c_{x_0} \\ c_{y_0} \\ c_{z_0} \end{bmatrix} = \begin{bmatrix} u_{x_0} \\ u_{y_0} \\ u_{z_0} \end{bmatrix} - c_4 \, \mathbf{R}_e^0 \begin{bmatrix} 0 \\ 0 \\ 1 \end{bmatrix}$$

where $\mathbf{R}_e^0$ is the orientation of the wrist defined in (1).

B. 3R ORTHO-PARALLEL SUBSTRUCTURE

At most four different postures are possible to position the manipulator end-point C of a spatial 3R manipulator to a desired point in space.

The scheme in Fig. 2 shows the 3 DoF manipulator with the notation of the link and joint parameters in the base coordinate system (O_0, x_0, y_0, z_0). Omitting the rotation at the manipulator's base ($\theta_1 = 0$), one obtains a partial structure of the 3R serial robot manipulator and deals with a planar configuration. The kinematics of the projection of the substructure in Fig. 3 onto the $x_1 z_1$ plane is analogue to a planar 2 DoF manipulator with offset a_1. The axes of the revolute joints in the side view (Fig. 3) are defined as points G_2 and G_3. The coordinates of point C in (O_1, x_1, y_1, z_1) are denoted as

$$c_{x_1} = c_2 \sin\theta_2 + k \sin(\theta_2 + \theta_3 + \psi_3) + a_1 \tag{2}$$

$$c_{y_1} = b \tag{3}$$

$$c_{z_1} = c_2 \cos\theta_2 + k \cos(\theta_2 + \theta_3 + \psi_3) \tag{4}$$

where $\psi_3 = \operatorname{atan}(a_2/c_3)$ and $k = \sqrt{a_2^2 + c_3^2}$.

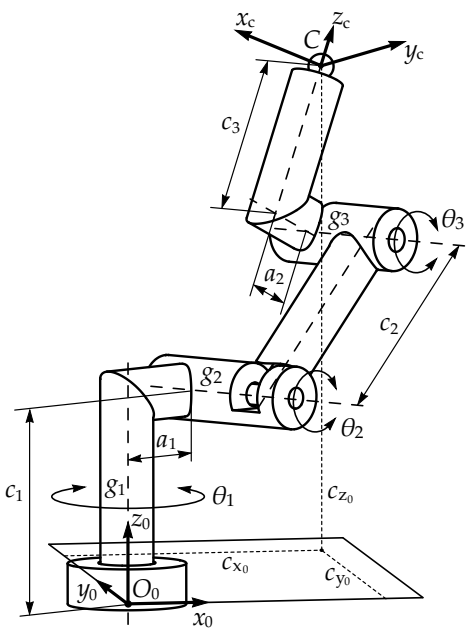

Fig. 2. Scheme with parameters of a serial ortho-parallel 3R manipulator.

1) Forward Kinematics: The coordinates c_{x_0}, c_{y_0} and c_{z_0} of point C in (O_0, x_0, y_0, z_0) as a function of the joint angles $\theta_1, \ldots, \theta_3$ can be computed by

$$c_{x_0} = c_{x_1} \cos\theta_1 - c_{y_1} \sin\theta_1 \ , \tag{5}$$

$$c_{y_0} = c_{x_1} \sin\theta_1 + c_{y_1} \cos\theta_1 \ , \tag{6}$$

$$c_{z_0} = c_{z_1} + c_1 \ , \tag{7}$$

using (2) to (4).

2) Inverse Kinematics: To find all possible joint angles of the 3R substructure for a given point C in space the following geometrical correlations are needed.

The component of the distance $\overline{G_2C}$ in direction x_1 is given by

$$n_{x_1} = c_{x_1} - a_1 \ , \tag{8}$$

see Fig. 3.

Furthermore, we define s_1 as the normal distance between axis g_2 (point G_2 in Fig. 3) and point C and calculate it by the Pythagorean theorem and (8):

$$s_1 = \sqrt{n_{x_1}^2 + c_{z_1}^2} = \sqrt{(c_{x_1} - a_1)^2 + c_{z_1}^2} \tag{9}$$

Substitution of c_{x_1} and c_{z_1} with (2) and (4) and some simplifications yield

$$s_1 = \sqrt{c_2^2 + k^2 + 2\, c_2\, k \cos(\theta_3 + \psi_3)} \ . \tag{10}$$

If s_1 and all design parameters are given, two possible solutions of θ_3 can be found.

It is useful for our further considerations to group the four possible postures of the 3R substructure into pairs. Variables which belong to the second posture pair are marked with a tilde in contrast to the first pair. A schematic top view with all four postures of the manipulator is given in Fig. 4(a). The first pair of postures shares the same axis g_2 for joint 2,

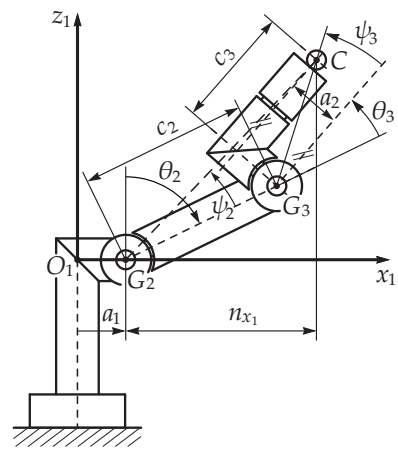

Fig. 3. Side view of the 3R serial ortho-parallel manipulator and its 2R substructure.

whereas the second pair shares axis $\tilde{g}_2$. The difference between the first and the second pair regarding to joint 1 is given by $\tilde{\theta}_1$. Figure 4(b) shows this geometrical description by the top view. We also note the simple correlation between the two posture pairs:

$$\tilde{n}_{x_1} = n_{x_1} + 2\, a_1 \tag{11}$$

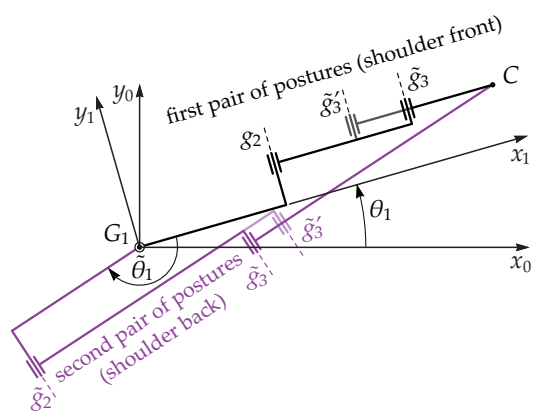

(a) A schematic top view of an ortho-parallel manipulator.

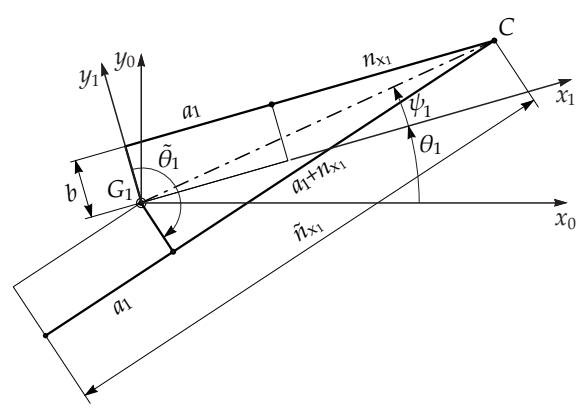

(b) The geometrical representation of the schematic top view.

Fig. 4. Geometric construction of the two pairs of postures configurations.

To compute s_2 similar to (9) we get the normal distance between axis $\tilde{g}_2$ and point C for the second possible pair of postures using (11):

$$s_2 = \sqrt{\tilde{n}_{x_1}^2 + c_{z_1}^2} = \sqrt{(n_{x_1} + 2\,a_1)^2 + c_{z_1}^2} \tag{12}$$

Substitution of n_{x_1} in (12) gives

$$s_2 = \sqrt{(c_{x_1} + a_1)^2 + c_{z_1}^2}\ . \tag{13}$$

By comparing (9) and (13) it follows that the two distances s_1 and s_2 are equal for every point C if $a_1 = 0$.

The projection of the rotated point C about the z_0-axis to the x_0y_0-plane can also be calculated by the sum of a constant rotation due to the geometrical structure

$$\psi_1 = \operatorname{atan2}(b,\, n_{x_1} + a_1)$$

and the joint angle $\theta_{1;\mathrm{i}}$ (see Fig. 4(b) again):

$$\operatorname{atan2}(c_{y_0},\, c_{x_0}) = \theta_{1;\mathrm{i}} + \psi_1$$

hence

$$\theta_{1;\mathrm{i}} = \operatorname{atan2}(c_{y_0},\, c_{x_0}) - \operatorname{atan2}(b,\, n_{x_1} + a_1)\ .$$

From now on, we define the notation of the joint angles by $\theta_{\mathrm{Axis;Solution(s)}}$. The second alternative of θ_1 can be found by

$$\theta_{1;\mathrm{ii}} = \theta_{1;\mathrm{i}} - \tilde{\theta}_1 = \theta_{1;\mathrm{i}} - 2\left(\frac{\pi}{2} - \psi_1\right) = \theta_{1;\mathrm{i}} + 2\,\psi_1 - \pi\,.$$

The first element of the set of possible solutions of the joint angle θ_2 can be found geometrically with the help of Fig. 3 (elbow down configuration):

$$\theta_{2,\mathrm{i}} = \operatorname{atan2}(n_{x_1},\, c_{z_1}) - \psi_2 \tag{14}$$

where

$$\psi_2 = \operatorname{acos}\left(\frac{s_1^2 + c_2^2 - k^2}{2\,s_1\,c_2}\right) \tag{15}$$

using the cosine formula. The second solution ($\theta_{2,\mathrm{ii}}$) arises from the elbow up configuration, we get

$$\theta_{2,\mathrm{ii}} = \operatorname{atan2}(n_{x_1},\, c_{z_1}) + \psi_2\ . \tag{16}$$

The remaining solutions ($\theta_{2;\mathrm{iii}}$ and $\theta_{2;\mathrm{iv}}$) result from the other pair of postures, i.e., the posture dependent variables have to be replaced: $s_1 \to s_2$ in (15), and $n_{x_1} \to \tilde{n}_{x_1}$ in (14) and (16). The same applies to $\theta_{3;\mathrm{iii}}$ and $\theta_{3;\mathrm{iv}}$ in (10).

C. 3R WRIST SUBSTRUCTURE

Using the four previously obtained positioning solutions for the calculation of direct kinematics the resulting orientation of the coordinate frame of point C with respect to the base coordinate system can be computed. For each positioning solution the three joints of the spherical wrist (see Fig. 5) have to be adjusted to get the desired orientation of the end-effector. Therefore the coordinate frame $\mathbf{R}_c^0$ has to be rotated by an unknown rotation described by rotation matrix $\mathbf{R}_\mathrm{e}^c$ which can be computed by composition of the rotations

$$\mathbf{R}_e^c = \mathbf{R}_c^{0\,T}\mathbf{R}_e^0 \tag{17}$$

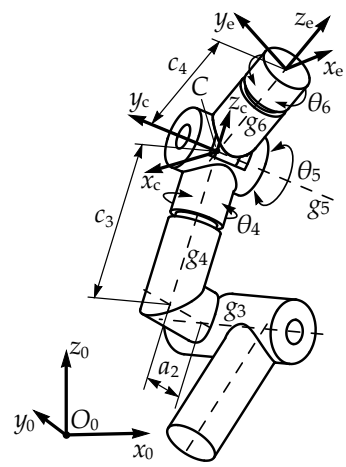

Fig. 5. Scheme with parameters of a 3R spherical wrist.

where $\mathbf{R}_e^0$ describes the desired wrist orientation. $\mathbf{R}_\mathrm{e}^c$ includes a z_c-axis rotation followed by a y_c-axis rotation and a rotation about the new z_c-axis:

$$\mathbf{R}_e^c = \begin{bmatrix} \mathfrak{c}_4\mathfrak{c}_5\mathfrak{c}_6 - \mathfrak{s}_4\mathfrak{s}_6 & -\mathfrak{c}_4\mathfrak{c}_5\mathfrak{s}_6 - \mathfrak{s}_4\mathfrak{c}_6 & \mathfrak{c}_4\mathfrak{s}_5 \\ \mathfrak{s}_4\mathfrak{c}_5\mathfrak{c}_6 + \mathfrak{c}_4\mathfrak{s}_6 & -\mathfrak{s}_4\mathfrak{c}_5\mathfrak{s}_6 + \mathfrak{c}_4\mathfrak{c}_6 & \mathfrak{s}_4\mathfrak{s}_5 \\ -\mathfrak{s}_5\mathfrak{c}_6 & \mathfrak{s}_5\mathfrak{s}_6 & \mathfrak{c}_5 \end{bmatrix}$$

where

$$\mathfrak{s}_i = \sin(\theta_i),\ \mathfrak{c}_i = \cos(\theta_i), \quad \text{for } i = 1\ldots6\ .$$

$\mathbf{R}_c^0$ is represented by a matrix of the form

$$\mathbf{R}_c^0 = \begin{bmatrix} \mathfrak{c}_1\mathfrak{c}_2\mathfrak{c}_3 - \mathfrak{c}_1\mathfrak{s}_2\mathfrak{s}_3 & -\mathfrak{s}_1 & \mathfrak{c}_1\mathfrak{c}_2\mathfrak{s}_3 + \mathfrak{c}_1\mathfrak{s}_2\mathfrak{c}_3 \\ \mathfrak{s}_1\mathfrak{c}_2\mathfrak{c}_3 - \mathfrak{s}_1\mathfrak{s}_2\mathfrak{s}_3 & \mathfrak{c}_1 & \mathfrak{s}_1\mathfrak{c}_2\mathfrak{s}_3 + \mathfrak{s}_1\mathfrak{s}_2\mathfrak{c}_3 \\ -\mathfrak{s}_2\mathfrak{c}_3 - \mathfrak{c}_2\mathfrak{s}_3 & 0 & -\mathfrak{s}_2\mathfrak{s}_3 + \mathfrak{c}_2\mathfrak{c}_3 \end{bmatrix}\ .$$

Evaluation of element (3,3) of matrix equation (17) delivers one joint angle solution for θ_5; from the elements (1,3) and (2,3) the related joint angle for θ_4 can be obtained; and from (3,1) and (3,2) the appropriate joint angle for θ_6 can be calculated. The second solution for the wrist angles can be easily computed from the previous solution. In inverse kinematics summary the finally obtained equations are shown.

For solving the orientation part of the forward kinematics problem, matrix $\mathbf{R}_e^0$ can be computed by evaluating $\mathbf{R}_c^0$ and $\mathbf{R}_e^c$ in (17).

D. SUMMARY

In this subsection, we will merge the partial joint solutions previously derived in the subsections *3R Ortho-Parallel Substructure* and *3R Wrist Substructure*. For the calculation of the inverse kinematics, the elements of the base-end-effector transformation matrix $\mathbf{R}_e^0$, and the OPW-parameters are necessary. All eight possible solutions of the joint angles are collected in Tab. II on the next page. It can be noted that the orientation part is independent of OPW-parameters.

If a serial manipulator with less than 6 DoF is considered, the absent axes in respect to the 6R manipulator must be kept constant at zero by choosing a correct input.

Positioning Part

$$[c_{x_0}\ \ c_{y_0}\ \ c_{z_0}]^T = [u_{x_0}\ \ u_{y_0}\ \ u_{z_0}]^T - c_4\,\mathbf{R}_e^0\,[0\ \ 0\ \ 1]^T$$

$$\theta_{1;\mathrm{i}} = \mathrm{atan2}\,(c_{y_0},\, c_{x_0}) - \mathrm{atan2}\,(b,\, n_{x_1} + a_1)$$

$$\theta_{1;\mathrm{ii}} = \mathrm{atan2}\,(c_{y_0},\, c_{x_0}) + \mathrm{atan2}\,(b,\, n_{x_1} + a_1) - \pi$$

$$\theta_{2;\mathrm{i,ii}} = \mp\mathrm{acos}\left(\frac{s_1^2 + c_2^2 - k^2}{2\,s_1\,c_2}\right) + \mathrm{atan2}\,(n_{x_1},\, c_{z_0} - c_1)$$

$$\theta_{2;\mathrm{iii,iv}} = \mp\mathrm{acos}\left(\frac{s_2^2 + c_2^2 - k^2}{2\,s_2\,c_2}\right) - \\ - \mathrm{atan2}\,(n_{x_1} + 2\,a_1,\, c_{z_0} - c_1)$$

$$\theta_{3;\mathrm{i,ii}} = \pm\mathrm{acos}\left(\frac{s_1^2 - c_2^2 - k^2}{2\,c_2\,k}\right) - \mathrm{atan2}\,(a_2,\, c_3)$$

$$\theta_{3;\mathrm{iii,iv}} = \pm\mathrm{acos}\left(\frac{s_2^2 - c_2^2 - k^2}{2\,c_2\,k}\right) - \mathrm{atan2}\,(a_2,\, c_3)$$

where

$$n_{x_1} = \sqrt{c_{x_0}^2 + c_{y_0}^2 - b^2} - a_1$$
$$s_1^2 = n_{x_1}^2 + (c_{z_0} - c_1)^2$$
$$s_2^2 = (n_{x_1} + 2\,a_1)^2 + (c_{z_0} - c_1)^2$$
$$k^2 = a_2^2 + c_3^2$$

Orientation Part

$$\theta_{4;\mathrm{p}} = \mathrm{atan2}(e_{2,3}\,\mathfrak{c}_{1;\mathrm{p}} - e_{1,3}\,\mathfrak{s}_{1;\mathrm{p}}, \\ e_{1,3}\,\mathfrak{c}_{23;\mathrm{p}}\,\mathfrak{c}_{1;\mathrm{p}} + e_{2,3}\,\mathfrak{c}_{23;\mathrm{p}}\,\mathfrak{s}_{1;\mathrm{p}} - e_{3,3}\,\mathfrak{s}_{23;\mathrm{p}})$$

$$\theta_{4;\mathrm{q}} = \theta_{4;\mathrm{p}} + \pi$$

$$\theta_{5;\mathrm{p}} = \mathrm{atan2}\left(\sqrt{1 - m_{\mathrm{p}}^2},\, m_{\mathrm{p}}\right)$$

$$\theta_{5;\mathrm{q}} = -\theta_{5;\mathrm{p}}$$

$$\theta_{6;\mathrm{p}} = \mathrm{atan2}(e_{1,2}\,\mathfrak{s}_{23;\mathrm{p}}\,\mathfrak{c}_{1;\mathrm{p}} + e_{2,2}\,\mathfrak{s}_{23;\mathrm{p}}\,\mathfrak{s}_{1;\mathrm{p}} + e_{3,2}\,\mathfrak{c}_{23;\mathrm{p}}, \\ - e_{1,1}\,\mathfrak{s}_{23;\mathrm{p}}\,\mathfrak{c}_{1;\mathrm{p}} - e_{2,1}\,\mathfrak{s}_{23;\mathrm{p}}\,\mathfrak{s}_{1;\mathrm{p}} - e_{3,1}\,\mathfrak{c}_{23;\mathrm{p}})$$

$$\theta_{6;\mathrm{q}} = \theta_{6;\mathrm{p}} - \pi$$

where

$$m_{\mathrm{p}} = e_{1,3}\,\mathfrak{s}_{23;\mathrm{p}}\,\mathfrak{c}_{1;\mathrm{p}} + e_{2,3}\,\mathfrak{s}_{23;\mathrm{p}}\,\mathfrak{s}_{1;\mathrm{p}} + e_{3,3}\,\mathfrak{c}_{23;\mathrm{p}}$$
$$\mathfrak{s}_{1;\mathrm{p}} = \sin(\theta_{1;\mathrm{p}}) \qquad \mathfrak{s}_{23;\mathrm{p}} = \sin(\theta_{2;\mathrm{p}} + \theta_{3;\mathrm{p}})$$
$$\mathfrak{c}_{1;\mathrm{p}} = \cos(\theta_{1;\mathrm{p}}) \qquad \mathfrak{c}_{23;\mathrm{p}} = \cos(\theta_{2;\mathrm{p}} + \theta_{3;\mathrm{p}})$$
$$\mathrm{p} = \{\mathrm{i, ii, iii, iv}\} \qquad \mathrm{q} = \{\mathrm{v, vi, vii, viii}\}$$

TABLE II

OVERVIEW OF ALL POSSIBLE SOLUTIONS.

	Solution							
Joint	1	2	3	4	5	6	7	8
θ_1	$\theta_{1;\mathrm{i}}$	$\theta_{1;\mathrm{i}}$	$\theta_{1;\mathrm{ii}}$	$\theta_{1;\mathrm{ii}}$	$\theta_{1;\mathrm{i}}$	$\theta_{1;\mathrm{i}}$	$\theta_{1;\mathrm{ii}}$	$\theta_{1;\mathrm{ii}}$
θ_2	$\theta_{2;\mathrm{i}}$	$\theta_{2;\mathrm{ii}}$	$\theta_{2;\mathrm{iii}}$	$\theta_{2;\mathrm{iv}}$	$\theta_{2;\mathrm{i}}$	$\theta_{2;\mathrm{ii}}$	$\theta_{2;\mathrm{iii}}$	$\theta_{2;\mathrm{iv}}$
θ_3	$\theta_{3;\mathrm{i}}$	$\theta_{3;\mathrm{ii}}$	$\theta_{3;\mathrm{iii}}$	$\theta_{3;\mathrm{iv}}$	$\theta_{3;\mathrm{i}}$	$\theta_{3;\mathrm{ii}}$	$\theta_{3;\mathrm{iii}}$	$\theta_{3;\mathrm{iv}}$
θ_4	$\theta_{4;\mathrm{i}}$	$\theta_{4;\mathrm{ii}}$	$\theta_{4;\mathrm{iii}}$	$\theta_{4;\mathrm{iv}}$	$\theta_{4;\mathrm{v}}$	$\theta_{4;\mathrm{vi}}$	$\theta_{4;\mathrm{vii}}$	$\theta_{4;\mathrm{viii}}$
θ_5	$\theta_{5;\mathrm{i}}$	$\theta_{5;\mathrm{ii}}$	$\theta_{5;\mathrm{iii}}$	$\theta_{5;\mathrm{iv}}$	$\theta_{5;\mathrm{v}}$	$\theta_{5;\mathrm{vi}}$	$\theta_{5;\mathrm{vii}}$	$\theta_{5;\mathrm{viii}}$
θ_6	$\theta_{6;\mathrm{i}}$	$\theta_{6;\mathrm{ii}}$	$\theta_{6;\mathrm{iii}}$	$\theta_{6;\mathrm{iv}}$	$\theta_{6;\mathrm{v}}$	$\theta_{6;\mathrm{vi}}$	$\theta_{6;\mathrm{vii}}$	$\theta_{6;\mathrm{viii}}$

IV. CONCLUSION

Denavit-Hartenberg parameters are a common method to describe the geometric structure of serial manipulators in kinematic calculations. However, the notation of this convention is not unique. Hence, for identical industrial robots different DH-parameter sets may be stated. Furthermore, they cannot be specified intuitively nor verified quickly. We therefore proposed a simplified description of the robots structure with a strong focus on practicability and applicability. The presented method allows to map all serial 6R manipulators with an ortho-parallel basis and a spherical wrist (321 kinematic structure with offsets). Based on these so-called OPW-parameters a generic analytical solution for the kinematics problem was given. For an easy and rapid use, an efficient and straightforward procedure for calculating the forward and inverse kinematics was presented.

ACKNOWLEDGMENT

This work was supported by Tiroler Standortagentur under the project KineControl of the Translational Research program.

REFERENCES

[1] J. Angeles, "Fundamentals of Robotic Mechanical Systems: Theory, Methods, and Algorithms," Mechanical Engineering Series. Springer, 2007.
[2] E. Ottaviano, M. Husty, and M. Ceccarelli, "A study on workspace topologies of 3R industrial-type manipulators," CEAI Journal on Control Engineering and Applied Informatics, 8(1):33–41, 2006.
[3] D. L. Pieper, "The kinematics of manipulators under computer control," Stanford Artificial Intelligence Report, 1968.
[4] J. Denavit, R. S. Hartenberg, "A kinematic notation for lower-pair mechanisms based on matrices," ASME Journal of Applied Mechanics, 23:215-221, 1955.
[5] C. S. G. Lee, and M. Ziegler, "A Geometrical Approach in Solving the Inverse Kinematics of PUMA Robots," Department of Electrical and Computer Engineering, University of Michigan, 1983.
[6] R. P. Paul, B. Shimano, and G. Mayer, "Kinematic Control Equations for Simple Manipulators," IEEE Transactions on Systems, Man, and Cybernetics, 8(11):1398–1406, 1978.
[7] M. A., Gonzlez-Palacios, "The unified orthogonal architecture of industrial serial manipulators," Robotics and Computer-Integrated Manufacturing, 29(1):257–271, 2013.
[8] S. Küçük, Z. Bingül, "The Inverse Kinematics Solutions of Industrial Robot Manipulators," Proceedings of the IEEE International Conference on Mechatronics (ICM '04), pp. 274–279, 2004.
[9] J. J. Craig, "Introduction to Robotics: Mechanics and Control," Addison-Wesley Longman Publishing Co., MA, USA, 1989.
[10] KUKA, Mobile manipulator for research and education - KUKA youBot," Kuka Roboter GmbH, 2013.
[11] Neuronics, "Katana 450 Benutzerhandbuch," Neuronics AG, 2008.
[12] Schunk, "Spezifikationen Powerball Leichtbauarm LWA4.6," Schunk GmbH & Co. KG.
[13] Stäubli, "Arm - TX series 40 family – Instruction manual," Stäubli GmbH, 2012.
[14] Epson, "Epson ProSix 6-Axis Robots," Epson Deutschland GmbH, 2011.
[15] ABB, "Product Specification IRB 2400," ABB Robotics Products AB.
[16] Fanuc, "R-2000iB™Series," Fanuc Robotics America, Inc., 2009.
[17] KUKA, "KR AGILUS sixx," KUKA Roboter GmbH, 2013.
[18] Adept, "Adept Viper s650/s850 Robot with MB-60R/eMB-60R User's Guide," Adept Technology, 2012.

View publication stats